ALL DIMENSIONS ARE IN MM UNLESS OTHERWISE SPECIFIED | SCALE – N.T.S.

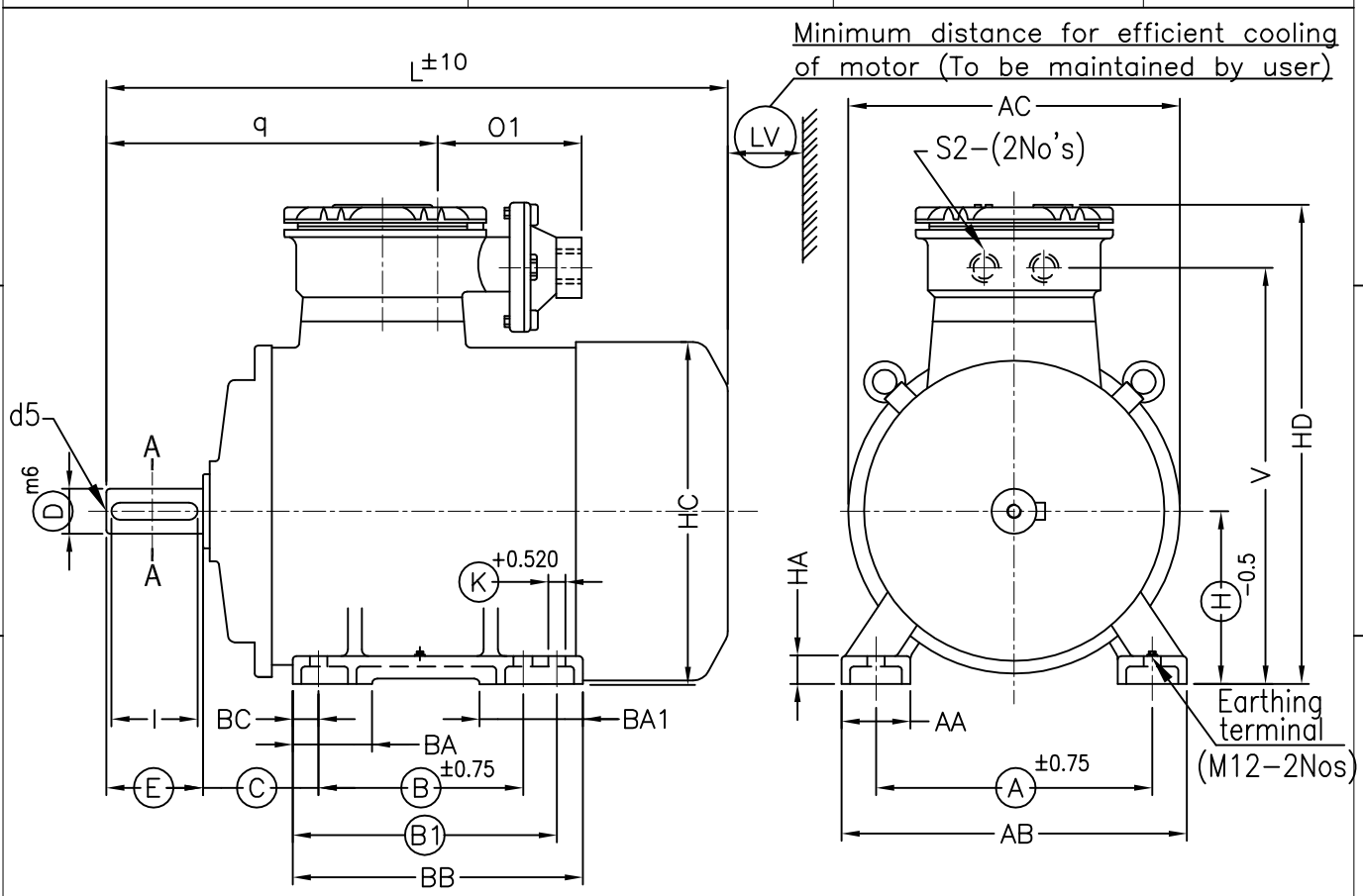

IEC Frame	Pole	Fixing A	B	B1	C	H	K	General AB	BB	AA	BA	BC	BA1	HA	HC	HD	L	LV	AC
225S	4 6&8	356	286	311	149	225	19	436	361	85	85	28	110	34	447	651	836	90	444

T Box V	O	O1	q	S2	Shaft D	E	F	GA	I	d5
564	308	264	444	M50x1.5P	60	140	18	64	130	M20

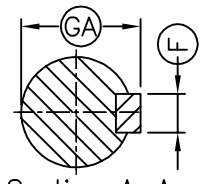

Section A–A

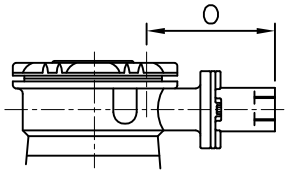

T Box arrangement with sealing box

Notes:–
1) Ringed dimensions are as per IS:1231/IEC60072
2) Terminal box can be rotated in 360 deg in steps of 90 deg.

Customer		Project	
P.O. No.		Consultant	
kW/Pole		Client/Contractor	
Frame		Package	
SO No.		Tag no's	

	NAME	DATE
DRN	YCJ	07.04.2015
CHD		
APPD		

TITLE: **DIMENSION DRAWING**

3PH SQUIRREL CAGE, TEFC (FOOT MOUNTED) FLAME PROOF(Ex'd') INDUCTION MOTOR

Bharat Bijlee
AIROLI, NAVI MUMBAI

DRG. No: D22S432TC